3500B/4000B/5000B Four Post Lift

3.5/4.0/5.0 Ton Four post hydraulic lift

The most advanced and completed functions four post lift has European humanization design ideals. It has other advantages for instance going up and down steadily, the noise is low, the structure is safe and trending towards rational and safer while operating. This type is the first choice for 4S station and top grade vehicle repair center.

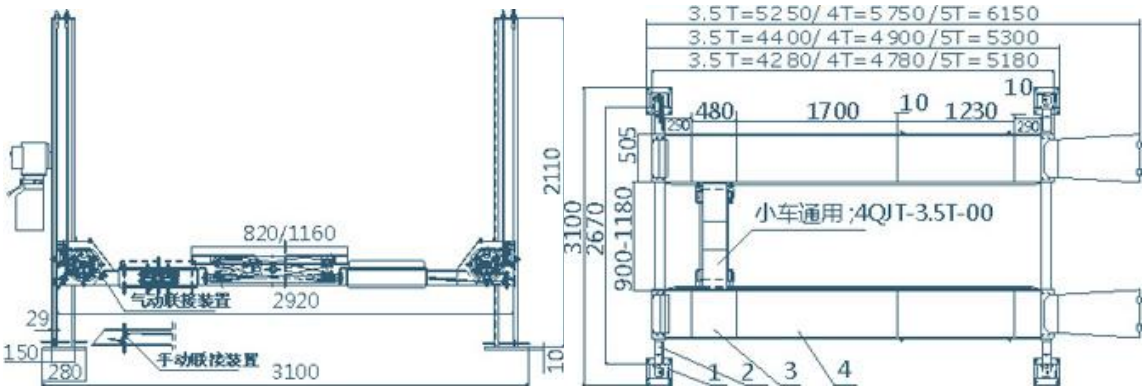

Model	3500B	4000B	5000B
Lifting Capacity	3500kg	4000kg	5000kg
Lifting Height	1700mm	1700mm	1700mm
Lowest Height	160mm	160mm	160mm
Overall Length	5250mm	5750mm	6150mm
Overall Width	3100mm	3100mm	3100mm
Unilateral Runway Width	505mm	505mm	505mm
Width between Runway	900-1180mm	900-1180mm	900-1180mm
Quadratic Lifting Height	275-540mm	275-540mm	275-540mm
Height of Post	2110mm	2110mm	2110mm
Lifting Time	55s	75s	90s
Lowering Time	50s	65s	80s
Motor Power	2.2kw	2.2kw	2.2kw
Power Supply	380/220v	380/220v	380/220v